ELIX ULTRA X MARINE	TECHNICAL DATASHEET	Created:	31.01.2024
		Modified:	5.3.2024

TYPE	M31
CODE	U-62040M

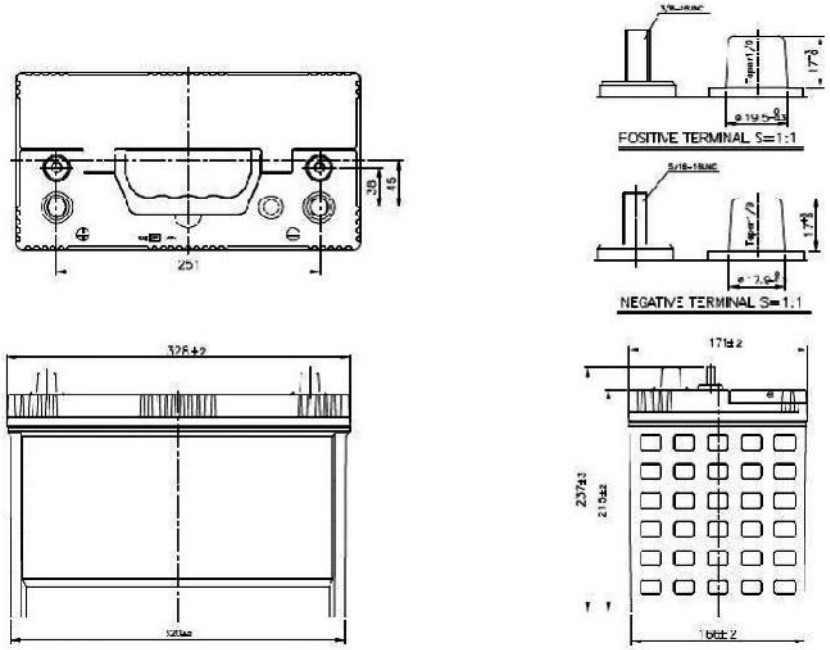

PERFORMANCES

Voltage (V):	0
C20(Ah):	120
Cold Cranking Ampere (A):	1030 CA
Charge Acceptance (A):	10,5
Plates per Cell (pcs):	20
Pos./ Grid Alloy:	Exp. / Pb-Ca-Sn
Neg./ Grid Alloy:	Exp. / Pb-Ca
Separator:	PE(Enveloped)

WEIGHT & DIMENSIONS (max.)

Battery Weight (kg):	24,6(+/-2%)
Lead Weight (kg):	14,067
Length (mm):	330
Width (mm):	173
Height (mm):	217
Total Height (mm) :	240

CONTAINER

Type:	M31
Hold Down:	Yes
H.D.Adapter:	No

COVER

Type:	-
Polarity:	(-,+) Cell layout
Terminal Adapter:	No
Magic Eye:	Yes
Degassing system	Short side
Flame Arrestor	Yes 2pcs(filter)

PLUGS

Type:	No Vent Sealed

HANDLE

Type:	Yes -

OTHERS

Degassing Tube:	No