ELIX ULTRA X MARINE	TECHNICAL DATASHEET	Created:	31.01.2024
		Modified:	5.3.2024

TYPE	M31
CODE	U-60531M

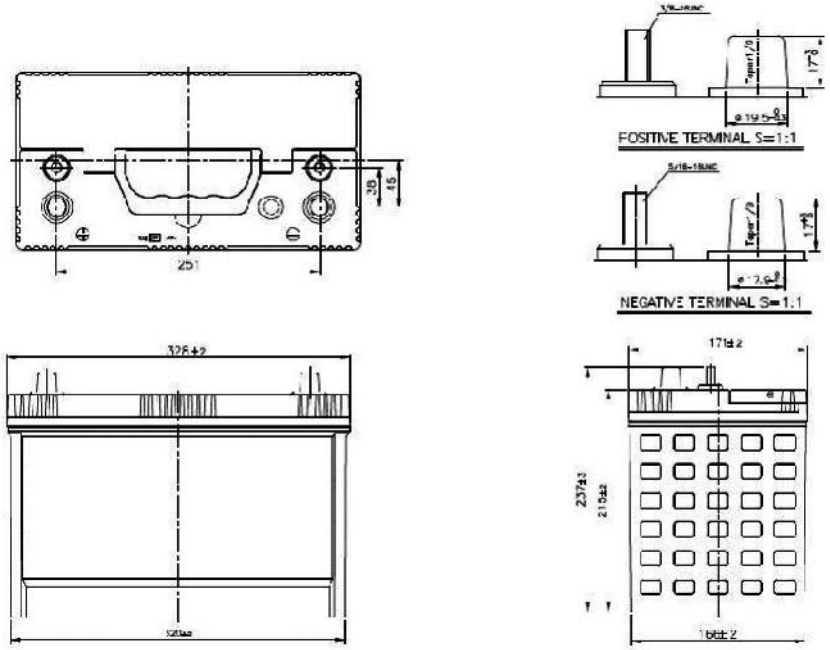

PERFORMANCES

Voltage (V):	0
C20(Ah):	105
Cold Cranking Ampere (A):	960 CA
Charge Acceptance (A):	9,5
Plates per Cell (pcs):	18
Pos./ Grid Alloy:	Exp. / Pb-Ca-Sn
Neg./ Grid Alloy:	Exp. / Pb-Ca
Separator:	PE(Enveloped)

WEIGHT & DIMENSIONS (max.)

Battery Weight (kg):	23,5(+/-2%)
Lead Weight (kg):	13,271
Length (mm):	307
Width (mm):	173
Height (mm):	200
Total Height (mm) :	225

CONTAINER

Type:	M31
Hold Down:	Yes
H.D.Adapter:	No

COVER

Type:	-
Polarity:	(+,-) Cell layout
Terminal Adapter:	No
Magic Eye:	Yes
Degassing system	Short side
Flame Arrestor	Yes 2pcs(filter)

PLUGS

Type:	No Vent Sealed

HANDLE

Type:	Yes -

OTHERS

Degassing Tube:	No